Чертежи и схемы

SRR25ZS-W SRR35ZS-W SRR25ZM-S SRR35ZM-S

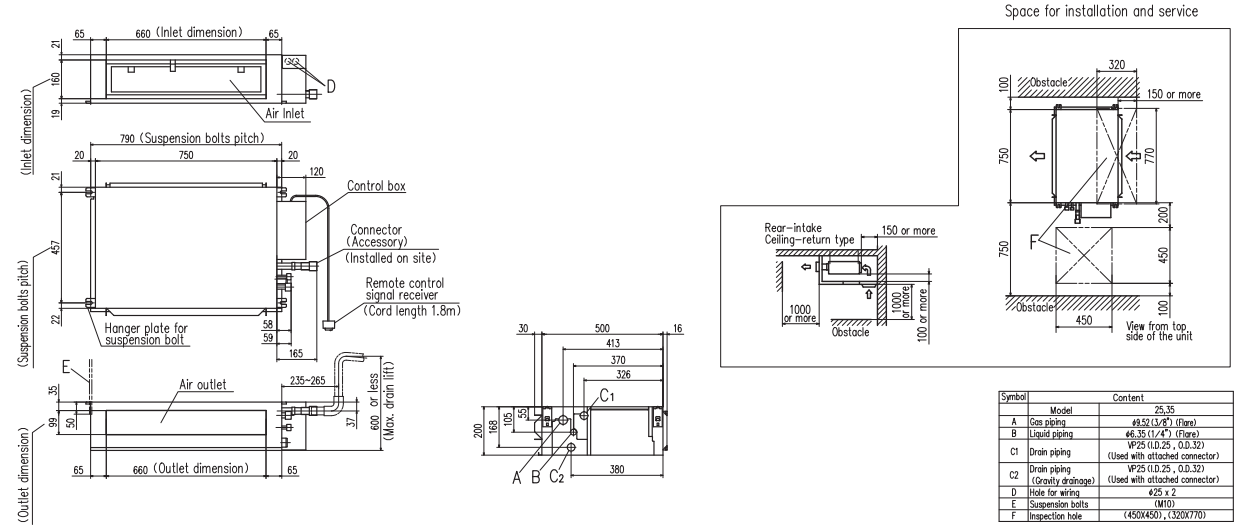

Symbol	Content	
	Model	25,35
A	Gas piping	ø9.52 (3/8") (Flare)
B	Liquid piping	ø6.35 (1/4") (Flare)
C1	Drain piping	VP25 (I.D.25 , O.D.32) (Used with attached connector)
C2	Drain piping (Gravity drainage)	VP25 (I.D.25 , O.D.32) (Used with attached connector)
D	Hole for wiring	ø25 x 2
E	Suspension bolts	(M10)
F	Inspection hole	(450X450) , (320X770)

SRR50ZS-W SRR60ZS-W

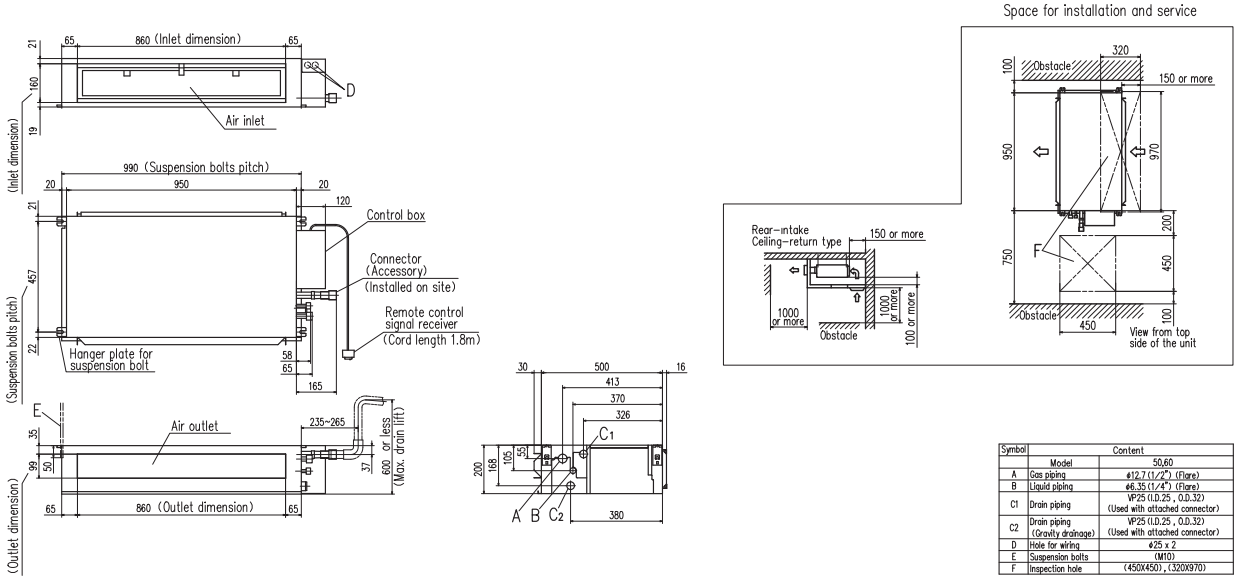

Symbol	Content	
	Model	50,60
A	Gas piping	ø12.7 (1/2") (Flare)
B	Liquid piping	ø6.35 (1/4") (Flare)
C1	Drain piping	VP25 (I.D.25 , O.D.32) (Used with attached connector)
C2	Drain piping (Gravity drainage)	VP25 (I.D.25 , O.D.32) (Used with attached connector)
D	Hole for wiring	ø25 x 2
E	Suspension bolts	(M10)
F	Inspection hole	(450X450) , (320X970)

FDTC25VH1 FDTC35VH1 FDTC40VH FDTC50VH FDTC60VH

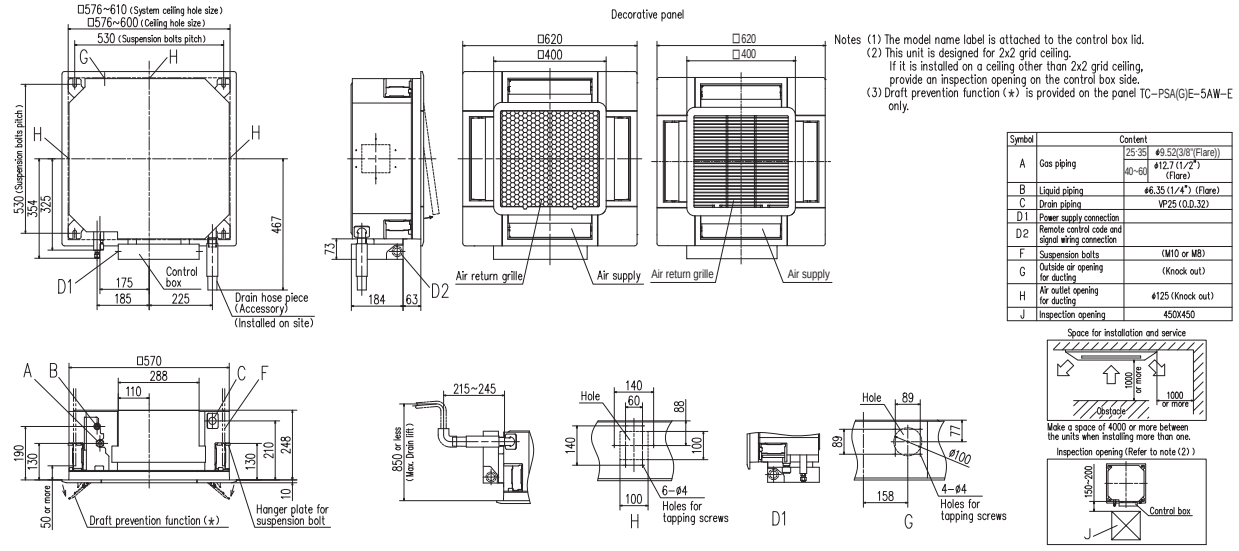

Notes (1) The model name label is attached to the control box lid.
(2) This unit is designed for 2x2 grid ceiling.
If it is installed on a ceiling other than 2x2 grid ceiling, provide an inspection opening on the control box side.
(3) Draft prevention function (*) is provided on the panel TC-PSA(G)E-5AW-E only.

Symbol	Content		
A	Gas piping	25-35	ø9.52(3/8"(Flare))
		40~60	ø12.7 (1/2") (Flare)
B	Liquid piping		ø6.35 (1/4") (Flare)
C	Drain piping		VP25 (O.D.32)
D1	Power supply connection		
D2	Remote control code and signal wiring connection		
F	Suspension bolts		(M10 or M8)
G	Outside air opening for ducting		(Knock out)
H	Air outlet opening for ducting		ø125 (Knock out)
J	Inspection opening		450X450