MITSUBISHI ELECTRIC

SPLIT-TYPE, HEAT PUMP AIR CONDITIONERS
SPLIT-TYPE, AIR CONDITIONERS

September 2019

No. OCB661
REVISED EDITION-A

PARTS CATALOG

Series PKA Wall Mounted R32/R410A

Indoor unit [Model Name]	[Service Ref.]
PKA-M60KA	PKA-M60KA.TH
PKA-M71KA	PKA-M71KA.TH
PKA-M100KA	PKA-M100KA.TH
PKA-M60KAL	PKA-M60KAL.TH
PKA-M71KAL	PKA-M71KAL.TH
PKA-M100KAL	PKA-M100KAL.TH

Revision:
- Some descriptions have been modified in REVISED EDITION-A.

OCB661 is void.

CONTENTS

1. SERVICE PARTS LIST 2

SERVICE MANUAL (OCH661)

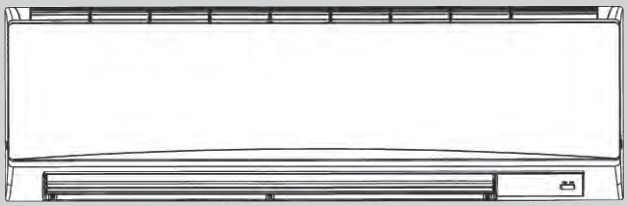

INDOOR UNIT

Mr.SLIM

1 SERVICE PARTS LIST

PANEL AND HEAT EXCHANGER PARTS

PKA-M60KA.TH **PKA-M71KA.TH** **PKA-M100KA.TH**
PKA-M60KAL.TH **PKA-M71KAL.TH** **PKA-M100KAL.TH**

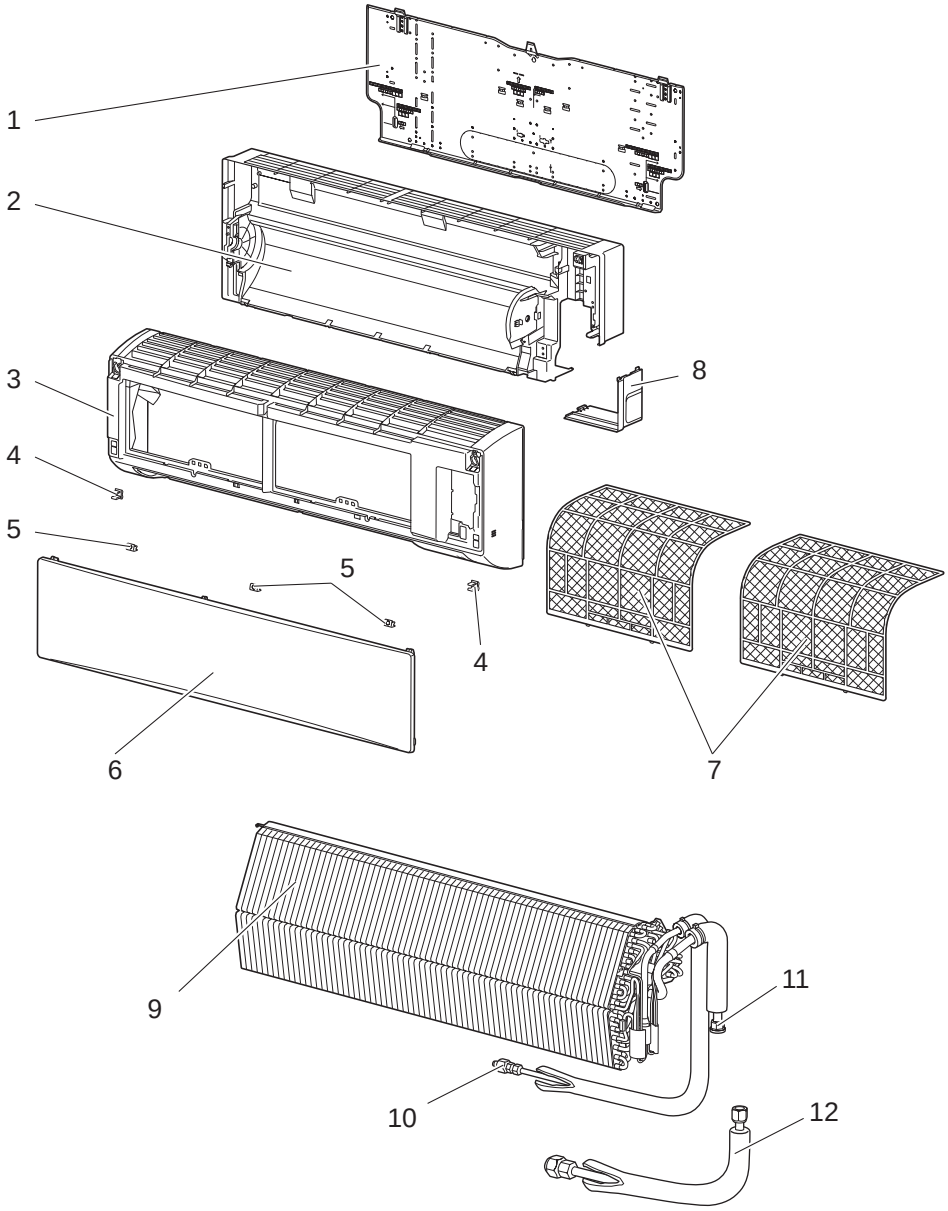

No.	Parts No.	Parts Name	Specification	Q'ty/unit						Remarks (Drawing No.)
				PKA-M60KA.TH	PKA-M71KA.TH	PKA-M100KA.TH	PKA-M60KAL.TH	PKA-M71KAL.TH	PKA-M100KAL.TH	
1	E22 C92 970	INSTALLATION PLATE		1	1	1	1	1	1	
2	E22 C92 234	BOX ASSEMBLY		1	1	1	1	1	1	
3	E27 A51 000	PANEL ASSEMBLY		1	1	1	1	1	1	
4	E22 408 142	CATCH		1	1	1	1	1	1	2PCS/SET
	E22 C92 142	CATCH		1	1	1	1	1	1	2PCS/SET
5	E22 C92 067	SCREW CAP		3	3	3	3	3	3	3PCS/SET
6	E27 B04 010	FRONT PANEL (NW)		1	1	1	1	1	1	
7	E22 C92 100	CATECHIN AIR FILTER		2	2	2	2	2	2	1PCS/SET
8	E22 C92 975	CORNER BOX R		1	1	1	1	1	1	
9	E27 520 620	HEAT EXCHANGER		1	1		1	1		
	E27 522 620	HEAT EXCHANGER				1			1	
10	E22 527 667	UNION (LIQ)		1	1	1	1	1	1	
11	E22 C92 666	UNION (GAS)		1	1	1	1	1	1	
12	E27 H49 980	JOINT ASSEMBLY		1	1	1	1	1	1	

FUNCTIONAL PARTS

PKA-M60KA.TH **PKA-M71KA.TH** **PKA-M100KA.TH**
PKA-M60KAL.TH **PKA-M71KAL.TH** **PKA-M100KAL.TH**

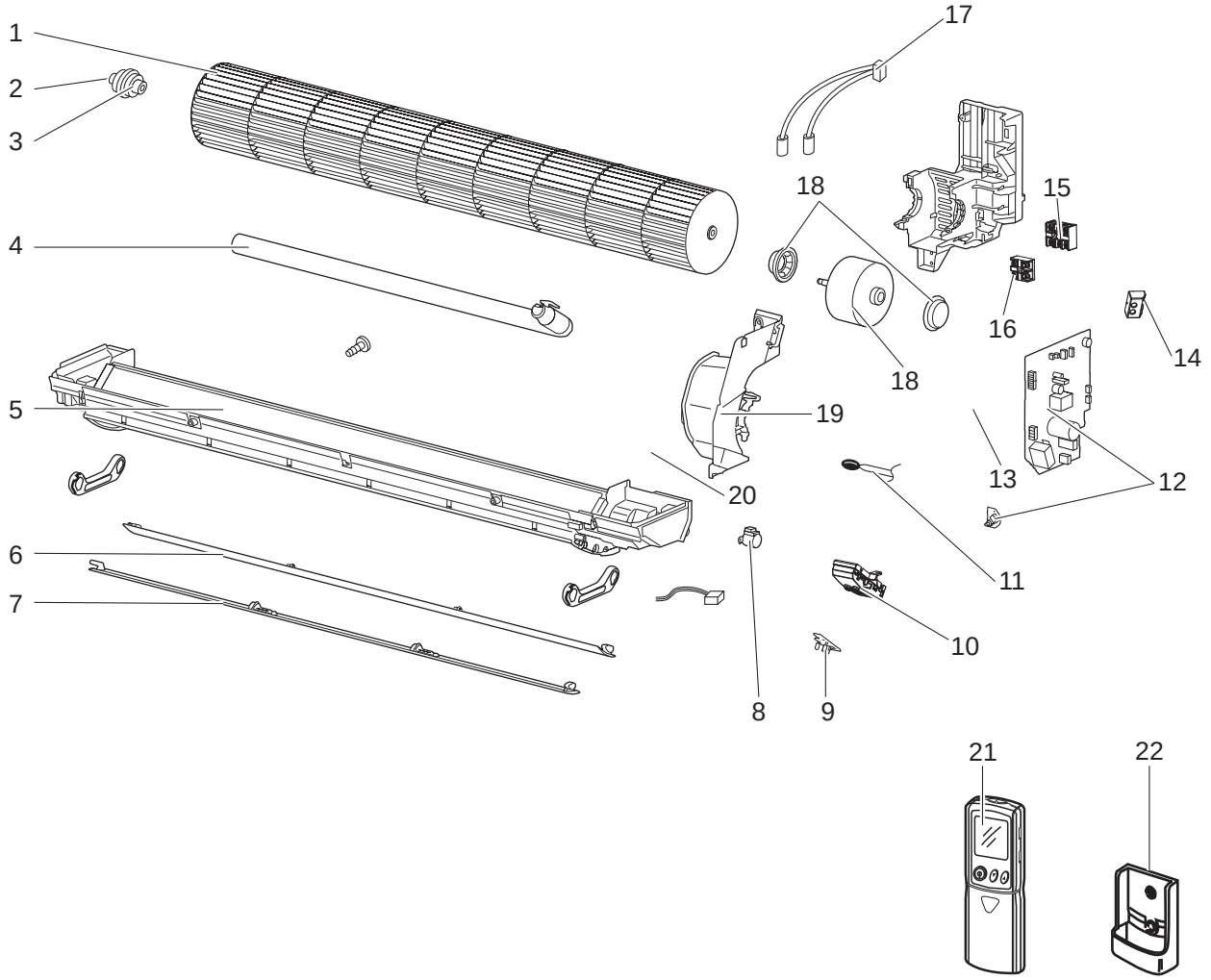

Parts numbers that are circled are not shown in the illustration.

No.	Parts No.	Parts Name	Specification	Q'ty/unit						Remarks (Drawing No.)
				PKA-M60KA.TH	PKA-M71KA.TH	PKA-M100KA.TH	PKA-M60KAL.TH	PKA-M71KAL.TH	PKA-M100KAL.TH	
1	E22 R79 302	LINE FLOW FAN		1	1	1	1	1	1	
2	E22 751 509	BEARING MOUNT		1	1	1	1	1	1	
3	E22 001 504	SLEEVE BEARING		1	1	1	1	1	1	
4	E22 T20 702	DRAIN HOSE		1	1	1	1	1	1	
5	E27 518 235	NOZZLE ASSEMBLY		1	1	1	1	1	1	
6	E22 C92 040	VANE UPPER		1	1	1	1	1	1	
7	E22 C92 041	VANE LOWER		1	1	1	1	1	1	
8	E22 749 303	VANE MOTOR		1	1	1	1	1	1	M
9	E27 518 468	RECEIVER P.C.BOARD		1	1	1	1	1	1	W.B.
10	E22 C92 095	RECEIVER HOLDER		1	1	1	1	1	1	
11	E27 518 308	ROOM TEMP. THERMISTOR		1	1	1	1	1	1	TH1
12	E27 H49 447	INDOOR CONTROLLER BOARD		1	1	1	1	1	1	I.B.
13	E27 489 337	REACTOR		1	1	1	1	1	1	DCL
14	E27 518 782	SWITCH HOLDER		1	1	1	1	1	1	
15	E27 489 375	TERMINAL BLOCK	3P (S1,S2,S3)	1	1	1	1	1	1	TB4
16	E27 516 375	TERMINAL BLOCK	2P (1,2)	1	1	1				TB5
17	E27 491 307	PIPE TEMP. THERMISTOR/LIQUID COND./EVA. TEMP THERMISTOR		1	1	1	1	1	1	TH2,TH5
18	E22 C92 300	FAN MOTOR		1	1	1	1	1	1	MF
19	E22 C92 333	MOTOR BAND		1	1	1	1	1	1	
20	E27 518 541	WATER COVER		1	1	1	1	1	1	
21	E27 A51 426	WIRELESS REMOTE CONTROLLER					1	1	1	
22	E27 489 083	REMOTE CONTROLLER HOLDER					1	1	1	
23	E22 784 382	FUSE	ET3.15AL 250VAC	1	1	1	1	1	1	FUSE

Mr.SLIM

MITSUBISHI ELECTRIC CORPORATION
HEAD OFFICE: TOKYO BUILDING, 2-7-3, MARUNOUCHI, CHIYODA-KU, TOKYO 100-8310, JAPAN

©Copyright 2017 MITSUBISHI ELECTRIC CORPORATION
Issued: Sep. 2019 No. OCB661 REVISED EDITION-A
Published: Mar. 2017 No.OCB661
Made in Japan

Specifications are subject to change without notice.